Arktis Laser Product Datasheet

LQS-0660 Passively Q-Switched Laser System



Series Specifications:

Nominal Wavelength	660 nm
Output Type	Q-Switched
Laser Source Type	DPSS

Overview:

The LQS-0660 Series of Diode-Pumped Solid-State (DPSS) Q-Switched Lasers are ideal for applications requiring a very high peak power or short pulse duration at 660 nm.

These lasers are commonly used for high-speed imaging, Raman spectroscopy, material processing, and a broad range of other applications. The driver is available as a plug-and-play benchtop system or an O.E.M. component designed for system integration.

Key Features:

- Pulse energy of 1 uJ - 2 uJ
- Pulse repetition rate of 1 Hz - 2 kHz
- Pulse duration of 15 ns
- Air cooled
- Runs on standard AC power (85 - 264 V, 47 - 63 Hz)
- 10,000 hour maintenance-free operating life (Expected)
- FDA/CDRH compliant Class IV enclosure

Package Includes:

- Laser Head
- Driver/Power Supply
- Power Cable
- BNC Connector (LabSpec models only)
- Keys, Safety Interlock
- Hard-shell Carrying Case

Specifications:

This spec sheet has been generated specifically for part number Q66-M, per your request, and data for the entire series is also displayed for your reference. The specs which are specific to Q66-M have been highlighted below in **red + bold**.

Output Power (mW)	**>2**, **>4**, **>10**
Single Pulse Energy (µJ)	**1**, **2**, **10**
Optimal Pulse Frequency (Hz)	**2000**
Output Power Stability (%RMS/4h)	**<1**, **<3**, **<5**
Central Wavelength (nm)	**660**
Wavelength Tolerance (+/- nm)	**1**
Divergence (mrad, full angle)	**<1.5**
Beam Dimensions (mm, $1/e^2$)	**1.2**
Warm-up Time (minutes)	**10**
Avg. Pulse Duration (ns)	**15**
Approximate Peak Power (W)	**100**, **330**
M^2	**<1.2**
Operating Temperature Range (°C)	**10 to 35**
Max. TTL Modulation Freq. (Hz)	**20000**
Minimum Pulsing Frequency (Hz)	**1**
Modulation Input Signal	**0-5 VDC**
Max. Power Input Duty Cycle	**100%**
Standard Warranty (months)	**12**
MTTF (operational hours)	**10000**
Weight of Product or Laser Head (kg)	**0.6**
Beam Height from Base Plate (mm)	**24.8**
Dimensions of Product or Laser Head (mm)	**140.8 (l) x 73 (w) x 46.2 (h)**

CW: All specifications are based on performance at full output power and after the specified warmup period. Output characteristics may change if the laser is run at a different power level.
Q-Switched: Specifications are based on the laser pulsing at the specified design frequency. Output characteristics may change if the laser is run at a different frequency.

Power Supply Options:

These lasers are available with several different power supply options. The model that you have selected is highlighted below, and any other options are shown for easy reference.

	Power Supply Type:	**SM**
FDA-Compliant Standard 	Input Power	**85v to 264v**
	Power Supply Weight (kg)	**1.2**
	Dimensions (mm)	**133 (l) x 130 (w) x 65 (h)**

*Power supply may not be exactly as shown, see dimensional drawings on next 2 pages.

*Dimensions for fiber-integrated (I_) include laser head packaged inside.

Regulatory Classification:

The model you have selected (Q66-M) requires the following safety label(s):



Dimensional Drawing - Laser Form Factor: M:

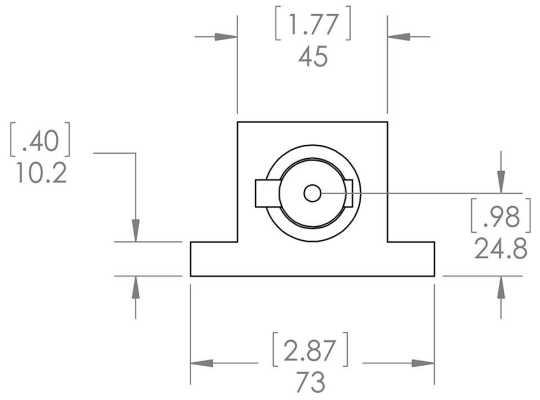

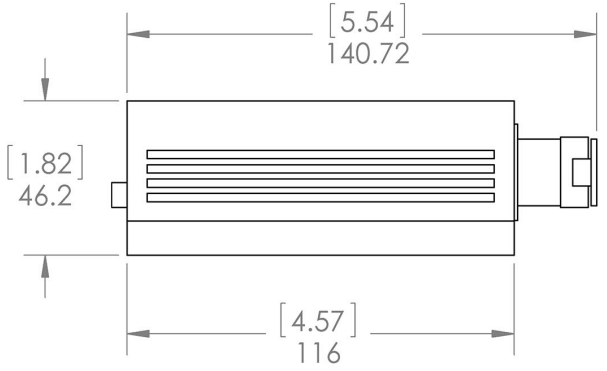

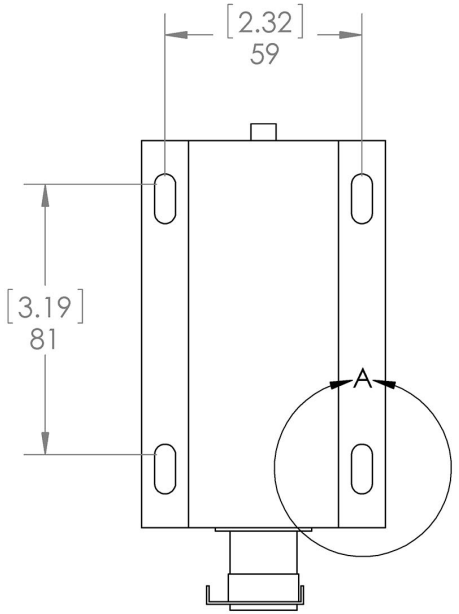

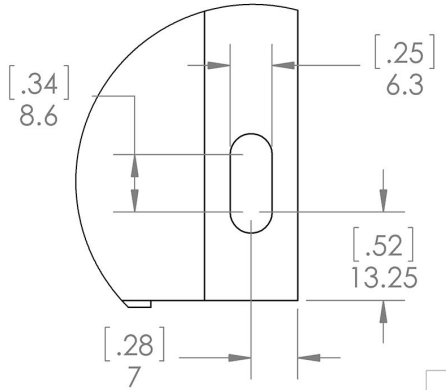

DETAIL A
SCALE 1 : 1

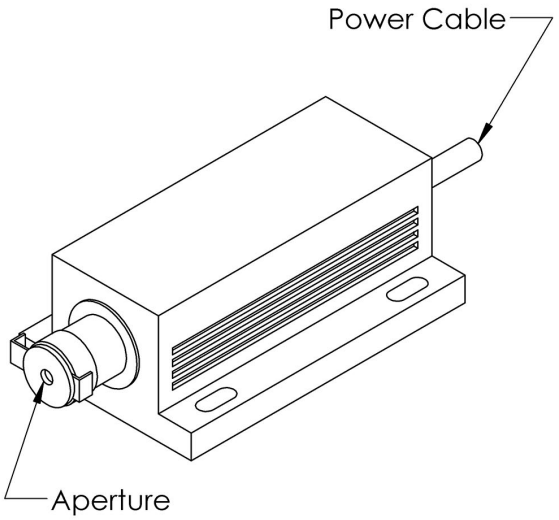

Laserglow Technologies

UNLESS OTHERWISE SPECIFIED:

DIMENSIONS ARE IN MM[INCH]
TOLERANCES: +/- 0.75 MM

THE INFORMATION CONTAINED IN THIS DRAWING IS THE SOLE PROPERTY OF LASERGLOW TECHNOLOGIES. ANY REPRODUCTION IN PART OR AS A WHOLE WITHOUT THE WRITTEN PERMISSION OF LASERGLOW TECHNOLOGIES IS PROHIBITED. © 2012 LASERGLOW.COM LIMITED. ALL RIGHTS RESERVED

TITLE:

Lab/OEM M/R Housing

REV 1

SCALE: 1:2

SHEET 1 OF 1

Dimensional Drawing - Power Supply Form Factor: SM:

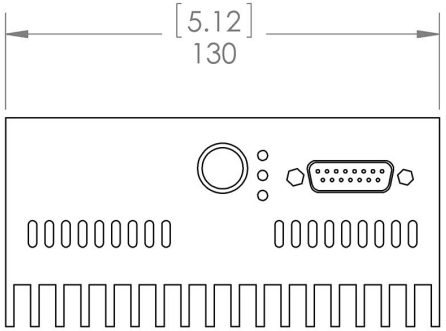

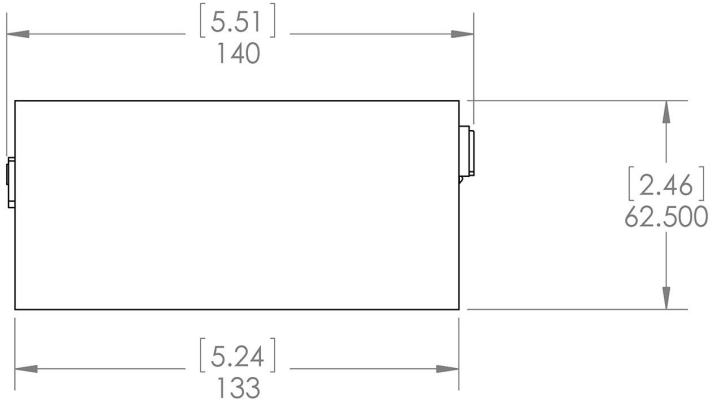

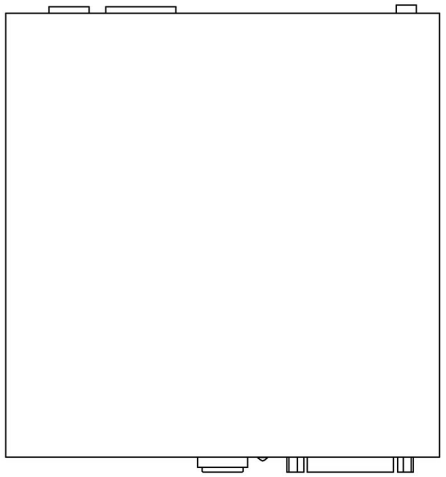

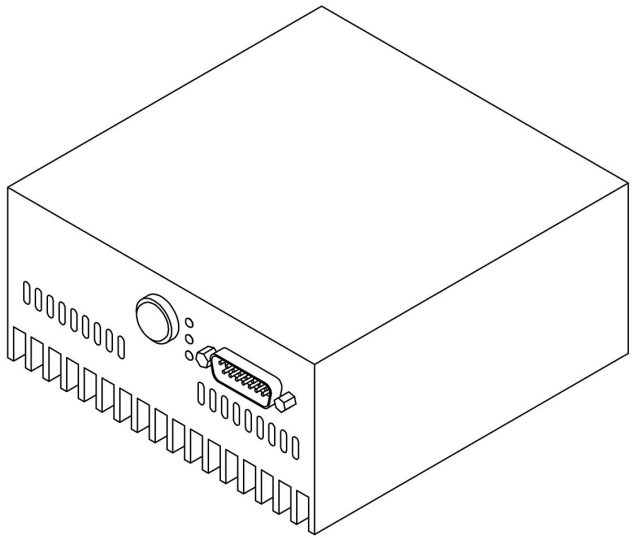

Laserglow Technologies

UNLESS OTHERWISE SPECIFIED:

DIMENSIONS ARE IN MM[INCH]
TOLERANCES: +/- 0.75 MM

THE INFORMATION CONTAINED IN THIS DRAWING IS THE SOLE PROPERTY OF LASERGLOW TECHNOLOGIES. ANY REPRODUCTION IN PART OR AS A WHOLE WITHOUT THE WRITTEN PERMISSION OF LASERGLOW TECHNOLOGIES IS PROHIBITED. © 2012 LASERGLOW.COM LIMITED. ALL RIGHTS RESERVED

TITLE:

Power Supply SM/SR

REV 1

SCALE: 1:2

SHEET 1 OF 1

Accessories:

The most popular accessories for model Q66-M are shown below. For additional details regarding these or other accessories please see our website or contact us directly.

Part Number	Description	

FOR MORE INFORMATION PLEASE CONTACT:

Arktis Laser
112 Elizabeth St, Unit 5-331, Toronto, ON, Canada M5G 1P5
Tel. 1-416-886-1178 Fax 1-647-874-7129
sales@arktislaser.com www.arktislaser.com

E&OE: Data included in this sheet may be subject to change without notice.
Please confirm critical specifications with our staff prior to ordering.